Handling of Reactor Internals at Forsmark Nuclear Power Plant

Jennifer Möller and Henrik Algotsson
Vattenfall Power Consultant AB
(under the auspices of Forsmarks Kraftgrupp AB)

Studsvik 2010-09-14

VATTENFALL

Background

- Uprating of the three BWRs at Forsmark required replacement of some reactor internals:
  - Core shroud head
  - Steam separators
  - Steam dryer
- These components are large, complex and highly radioactive after being exposed to radiation and contamination in the reactor for more than 25 years.

The problem

- The old reactor internals must be disposed of or stored away from the reactor as there is no space available in the storage pools to store more waste
- Necessary to cut the components into smaller pieces to enable transportation and packaging
- No final repository available for components with long-lived activity, such as the core shroud head
- No transport container approved for shipment of these components in large pieces
- No local storage facility available for material with high dose rates

Alternatives evaluated

- Packaging alternatives
  - 4-kokillslåda for steam separator and steam dryer - SFR
  - BFA-tank for Core Shroud Lid
  - Small containers suitable for storage in the pools at Clab (Central Storage for Spent Fuel)
- Storage location alternatives
  - Interim storage at BFA at Oskarshamn
  - Storage in the pools at Forsmark or Clab
  - Interim storage in an existing Forsmark building
  - New interim storage facility

Alternatives evaluated – rejected and selected

- Packaging alternatives
  - 4-kokillslåda for steam separators and steam dryer – not practical to have 2 systems
  - BFA-tank for Core Shroud Lid – to be used for all components
  - Small containers suitable for storage in the pools at Clab – impractical, too much cutting
- Storage location alternatives
  - Interim storage at BFA at Oskarshamn – no transport container
  - Storage in the pools at Forsmark – no space
  - or Clab – too much cutting
  - Interim storage in an existing Forsmark building – not possible, high dose rates, heavy containers
  - New interim storage facility – ultimately chosen

The solution

- Modify Oskarshamns Kraftgrupp's (OKG) system using BFA-tanks (1 m x 2 m x 3 m)
  - Provide more shielding,
  - Enable remote handling to reduce dose
  - Allow for drying the waste
  - Redundant lifting
- Build an interim storage facility at Forsmark where the BFA-tanks can be stored until a permanent storage facility is available, or the waste can be treated

Investigations performed

- Waste characterization
  - Radionuclide inventory of the different internal components
  - Volumes of waste to be produced
  - Masses of waste
- Dose rates
  - Dose rates on the containers
  - Dose rates outside the interim storage facility

What made the process so interesting

The solution evolved over several years which meant that there was new information and requirements coming in.

- It was not permitted to have interim storage in SFR.
- The waste currently in the pools did not have to be removed right away, as originally intended
- The transport container, ATB 1T, will take 5 years to design, test and manufacture.

What made the process so interesting (cont)

- Steam separators and steam dryer have too much void to be disposed of in SFR. Grouting would be necessary. Not a trivial operation.
  - We were running out of time
  - Decided to use a single system (BFA-tanks) for all components, despite the cost. BFA-tank is overdesigned for steam separators and steam dryer
  - OKG has successfully decontaminated ÅS using the CORD system.

The Development of the System - Sponsors and Major Stakeholders

- The Project was carried out within the Forsmark organization
- The design and manufacturing of the equipment was partly financed by Forsmarks Kraftgrupp AB and partly by the Swedish Nuclear Fuel and Waste Management Co (SKB)
- Vattenfall Power Consultant AB designed the equipment
- Oskarshamnsvarvet Sweden AB manufactured the equipment

The Hardware

VATTENFALL

The Development of the System - Major Requirements & Constraints

- Radiation => Shielding => Heavy lifting
- The system operates in the Reactor Hall => Redundant lifting
- Radiation => Remote-controlled lifting
- Water => Increases the complexity in the system and the number of components in use
- Storage Pools are deep in relation to the available lifting height in the Reactor Hall => Special lifting arrangements/manoeuvres

3 types/levels of containers - Cassettes, Tanks and Transport Box

- The System is dimensioned for a (BFA-tank-) surface dose rate of max. 200 mSv/h
- Cassettes - carriers of segmented Reactor Internals (max. 12 tonnes) from the Storage Pools to the Reactor Hall floor and into the BFA-tanks
- Optimization of material with respect to various radioactivity levels of the waste; BFA-tanks are manufactured with 4 different wall thicknesses; 50, 100, 150 and 200 mm
- Transport Box - carrier of BFA-tanks between the Reactor Hall and the Interim Storage Facility

Cassette (3-6 tonnes)

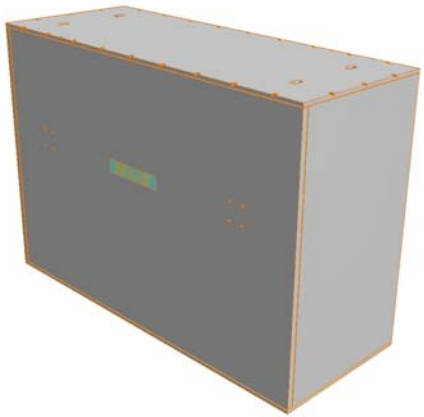

BFA-tank (10-33 tonnes, ext. dim. 1,3 x 2,3 x 3,3 m)

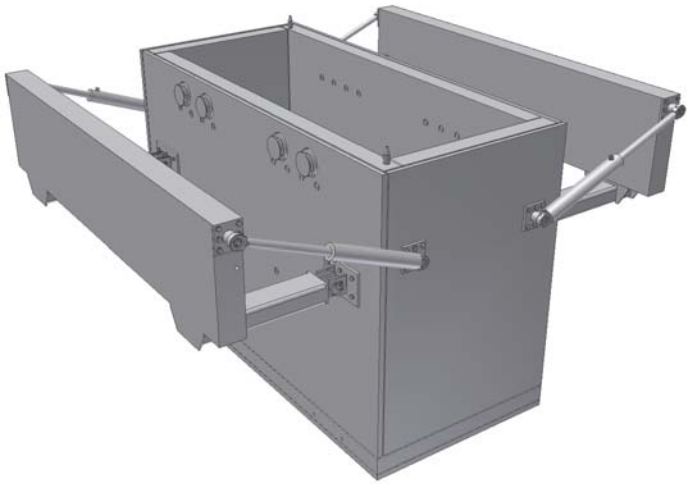

Transport Box (58 tonnes)

VATTENFALL

Handling of Cassettes

- Cassette Strongback - lifting of empty Cassettes
- Cassette Frames - guiding and positioning of the Cassettes, the Wet Hood and the Cassette Strongback under water
- Wet Hood - lifting of filled Cassettes from the Storage Pools and positioning them in the BFA-tanks/Transport Box

Cassette Strongback

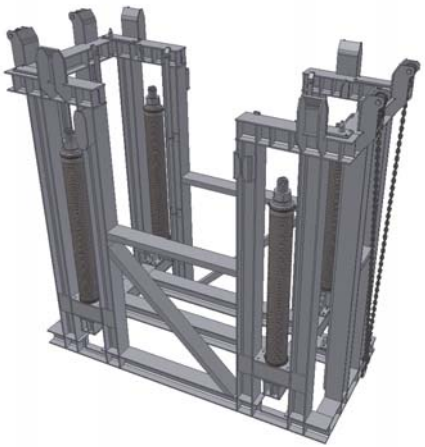

Cassette Frame

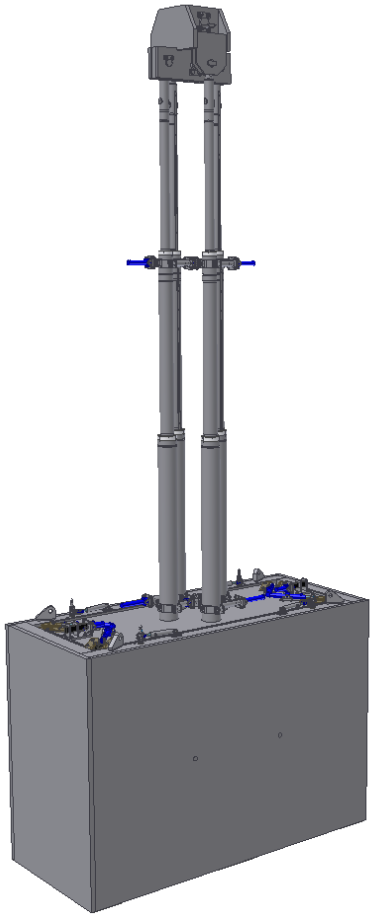

Wet Hood (47 tonnes)

VATTENFALL

Handling of BFA-tanks and the Transport Box

- Redundant BFA-tank Strongback – lifting the BFA-tanks lids on and off, also used for lifting of the Vacuum Cover
- BFA-tank Strongback - lifting and positioning of BFA-tanks in the Interim Storage Facility

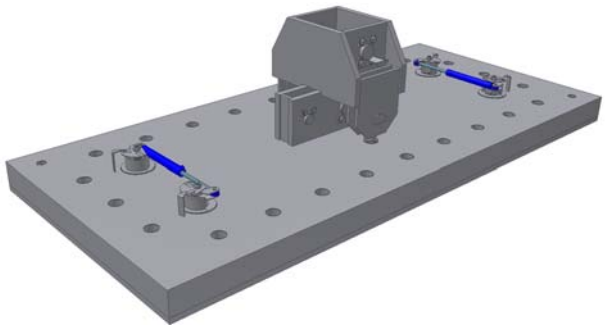

Redundant BFA-tank Strongback

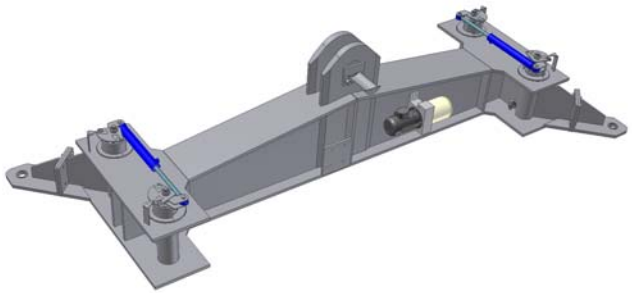

BFA-tank Strongback

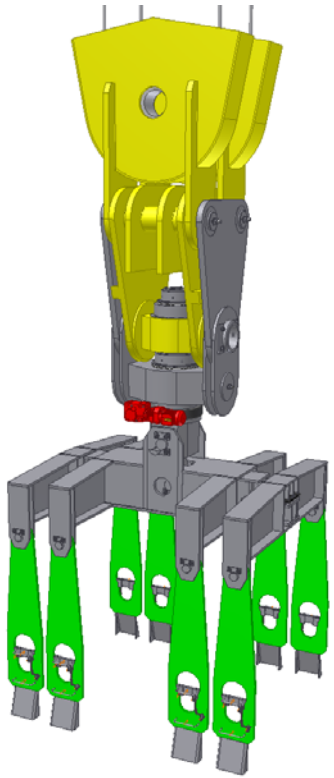

Transport Box Strongback
(fixed in the Rotatable Crane Hook**)**

VATTENFALL

Vacuum Cover, Docking Protection and Rotatable Crane Hook

- Vacuum Cover – device for drying the contents of the BFA-tanks (is connected to existing equipment for drying of spent fuel)
- Docking Protection Plate - minimizes the risk for contamination when the Wet Hood is operated around and on the Transport Box
- Rotatable Crane Hook - enables remote-controlled rotation of load (temporary modification of existing Crane Hook)

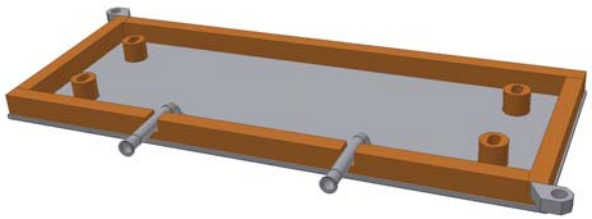

Vacuum Cover

Docking Protection Plate with Strongback

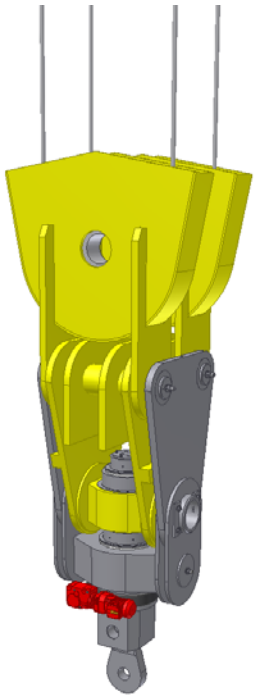

Rotatable Crane Hook

VATTENFALL

The Operation

VATTENFALL

Handling of empty Cassettes and the Cassette Frames

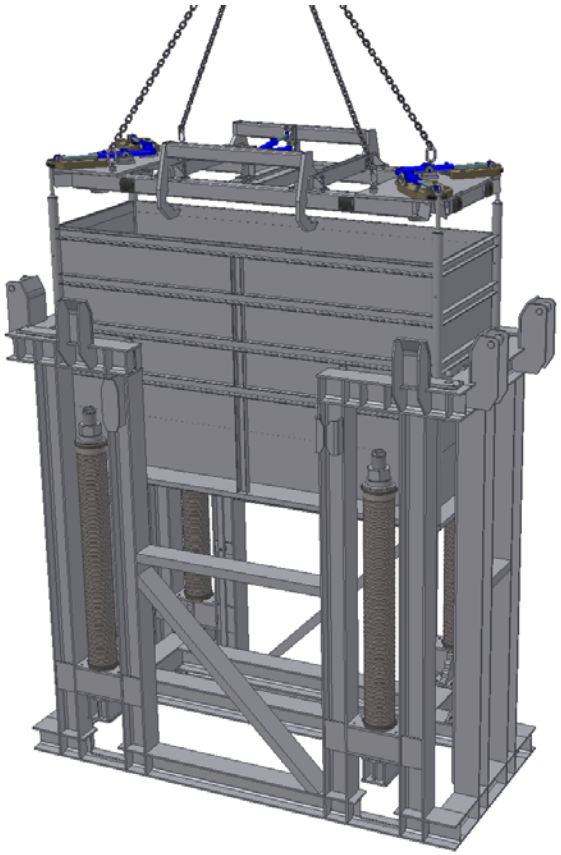

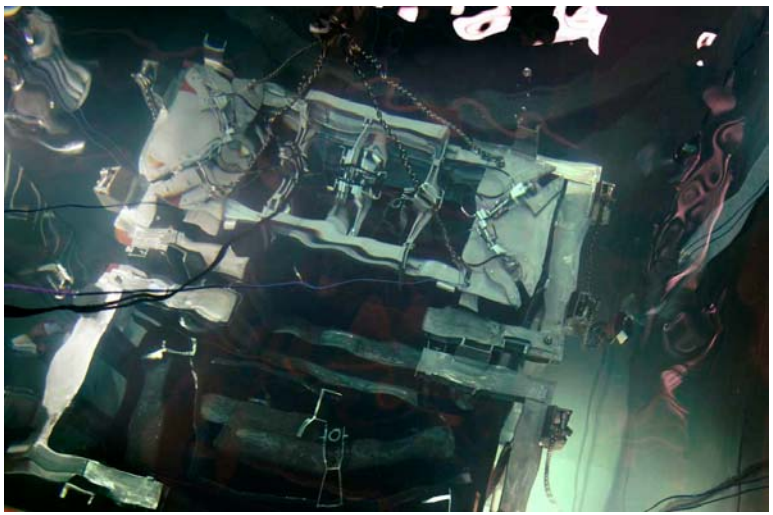

VATTENFALL

Handling of the Transport Box, the BFA-tank lid and the Docking Protection Plate

VATTENFALL

Wet Hood – handling of loaded Cassette in the Storage Pool

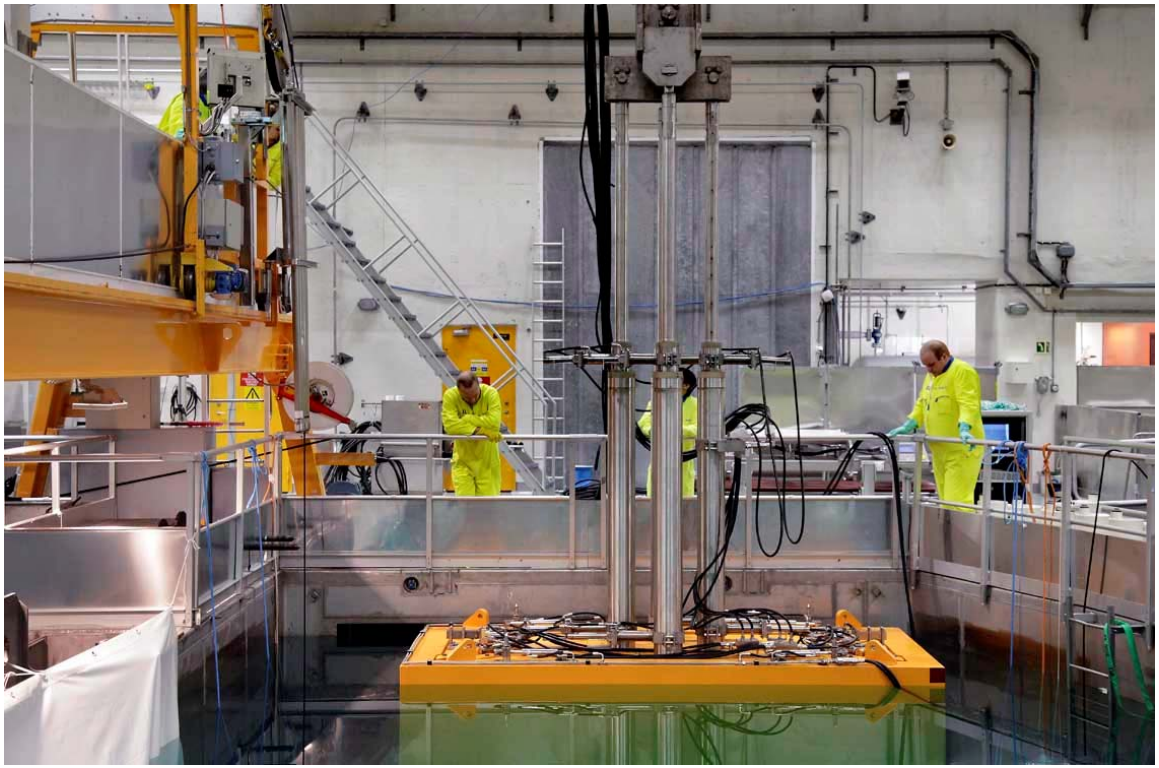

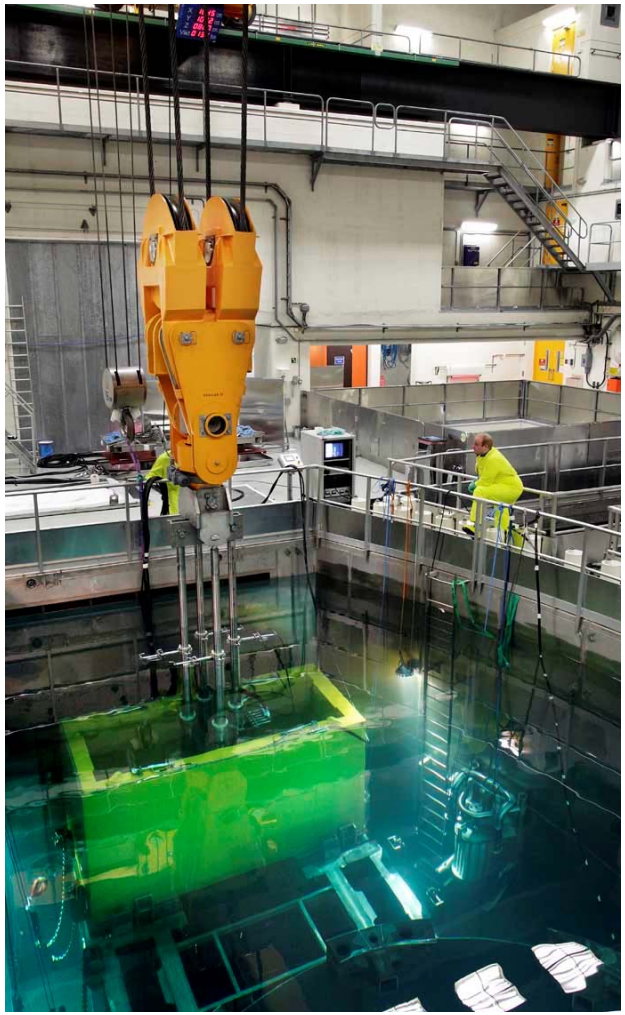

VATTENFALL

Wet Hood – handling of loaded Cassette in the Storage Pool

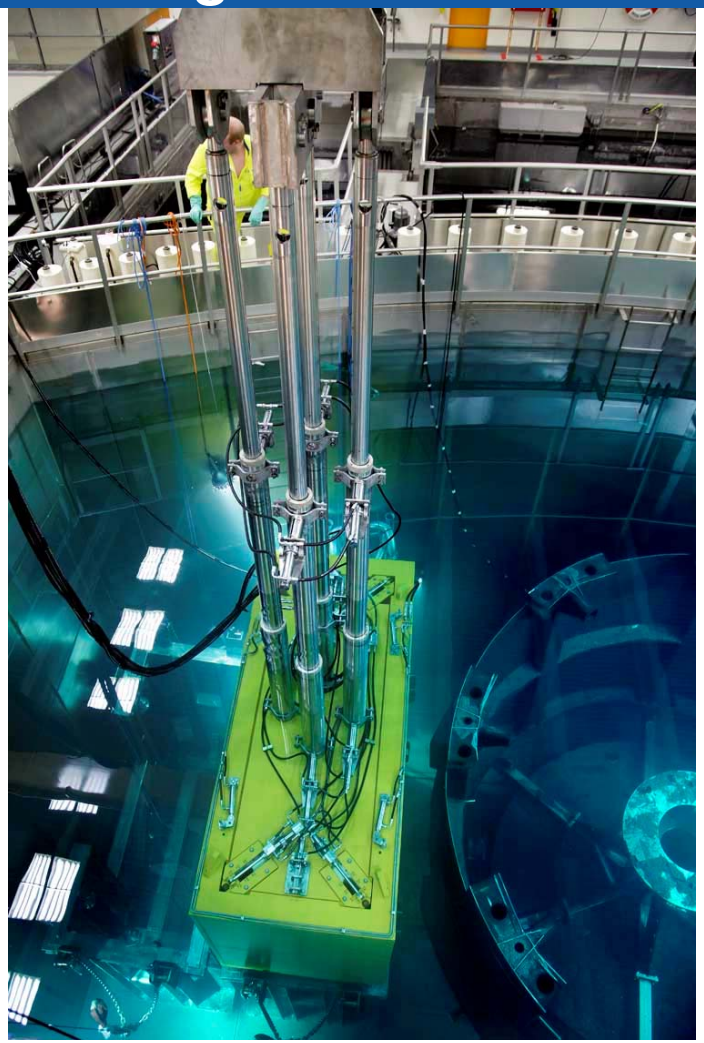

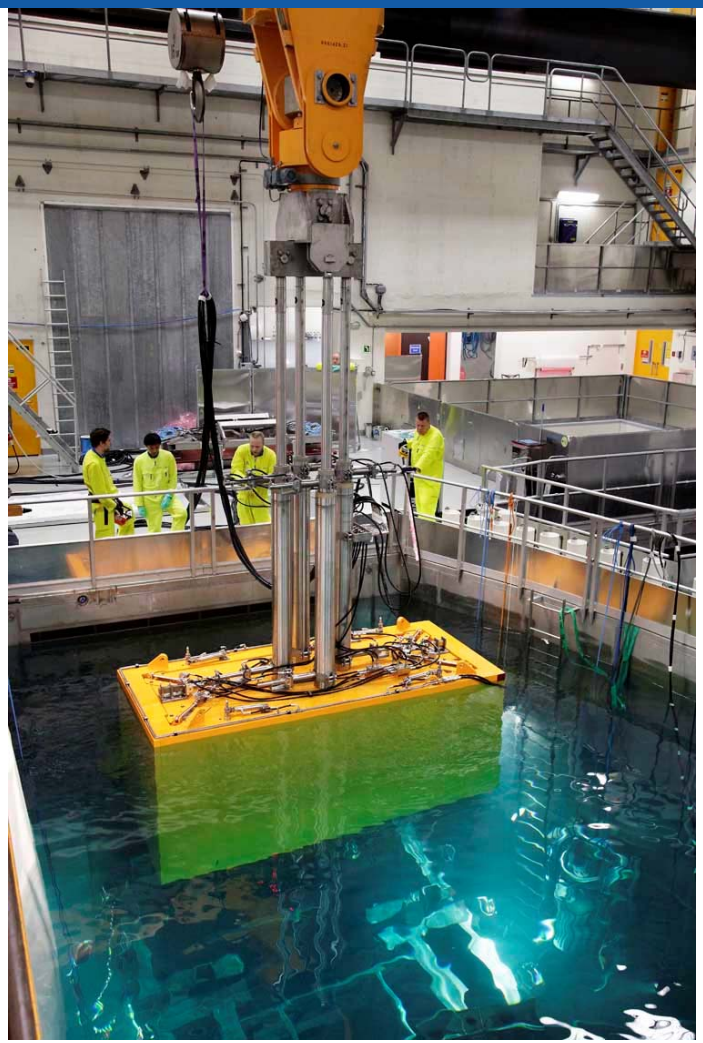

VATTENFALL

Wet Hood – preparations for docking against the Transport Box and the BFA-tank

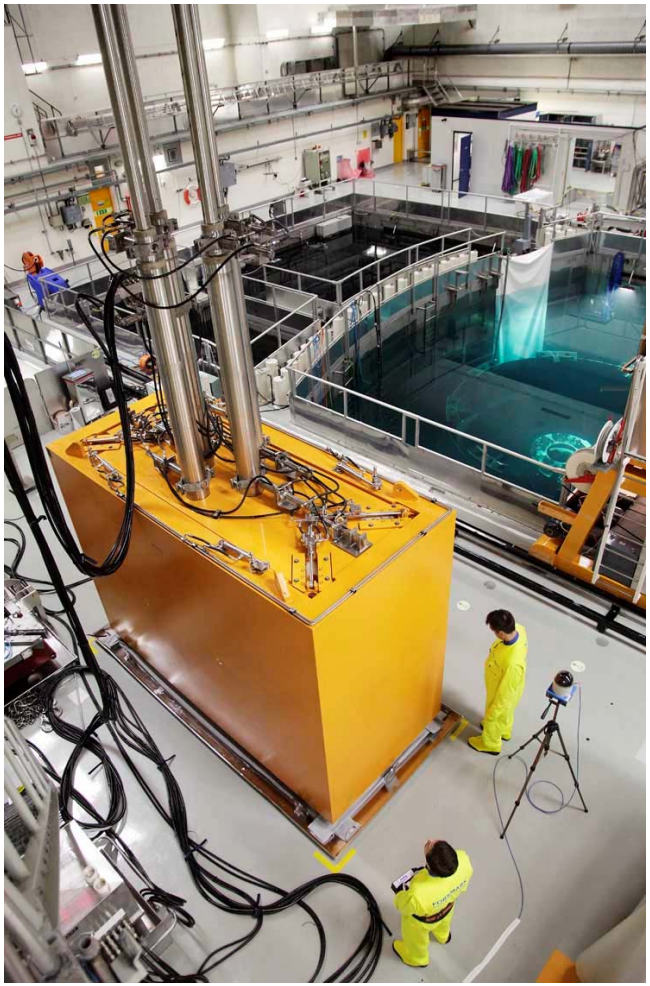

VATTENFALL

Wet Hood – docking against the Transport Box and the BFA-tank

VATTENFALL

Wet Hood – Loading of the BFA-tank and preparations for transportation of the Transport Box

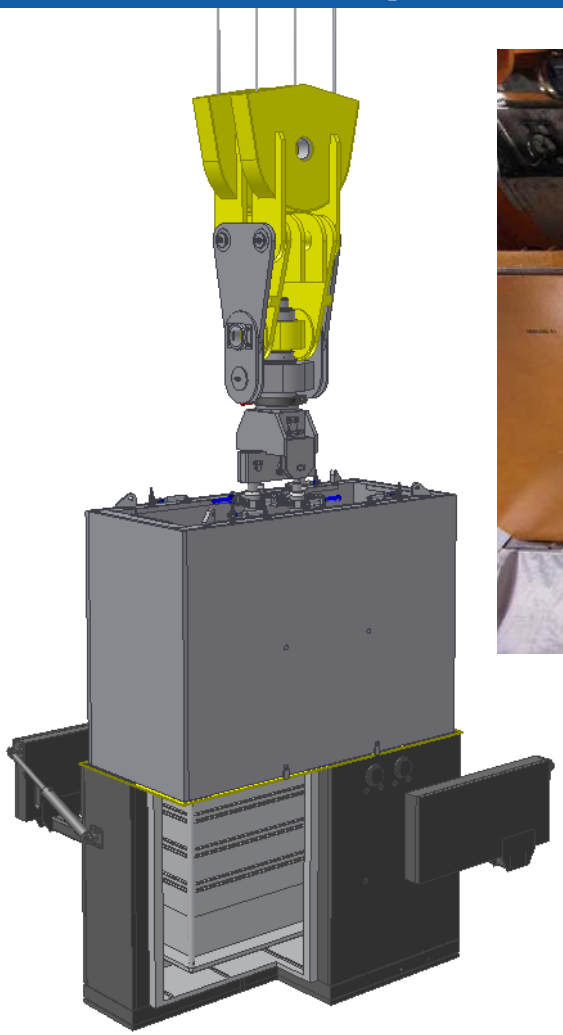

VATTENFALL

Transport Box – transportation from the Reactor Building to the Interim Storage Facility

VATTENFALL

The Interim Storage Facility at Forsmark

- Fully remote-controlled handling
- Originally intended to store 56 BFA-tanks in 2 layers
- Now planned to have 3 layers (84 BFA-tanks)
- In order to minimize dose rate, the tanks are placed in a specific pattern (hottest in the middle)

VATTENFALL

The Interim Storage Facility - remote-controlled handling of the BFA-tank

VATTENFALL

Lessons Learned and Key Success Factors

- The combination of large components, tight design tolerances and close interfaces between components has been a challenge!
- The identification and involvement of Stakeholders at an early stage have contributed to a safe and workable system
- The importance of a thorough Factory Acceptance Test Programme (as close to the real environment as possible)
- A close and positive relationship with the manufacturer – part of the project, not counterpart