Seminar on Decommissioning of nuclear facilities
Studsvik 14th-16th September 2010

Development and qualification of waste packages for SFR Silo

Tommy Hansson
Specialist Radioactive Waste Management

VATTENFALL

Ringhals – the largest power plant in Sweden

VATTENFALL

Ringhals AB

- Owners: Vattenfall (70,4 %) and E.ON (29,6 %)
- Number of reactors in operation: 4
- Production capacity: approx. 28 TWh/year
- Installed power: 3642 MW
- No. of employees: approx.1514
- Covers approx. 20 per cent of the total demand for electricity in Sweden.
- Ringhals AB with subsidiary Barsebäck Kraft AB

VATTENFALL

Why developing a new package for SFR Silo?

- No existing waste package for metallic and other inorganic scrap to be disposed in SFR Silo

General target:

- Maximised payload and net volume
- A package designed to fulfil physical resistance requirements without taking waste form and solidification of the waste into account
- A design which fulfils requirements for alternative waste routes
- A wish to develop a basic package design common for all Swedish waste generators
- The handling or long term safety must not be jeopardized

The Vattenfall Ringhals perspective

- A type 24 package for SFR Silo is urgently needed
- A strong team is required
  Ringhals – waste owner
  Studsvik - waste treatment and technical consultants
  KG-gruppen – production logistics and mould production
  WSP – technical calculations and simulations
- A tight dialogue with SKB is a must
- The alternative routes (SFR Silo, SFR BMA and SFL) should all be possible with the same design
- Try to merge the common need in the Swedish nuclear industry regarding a common type 24 package and the Ringhals need for the SG-project

The Swedish system

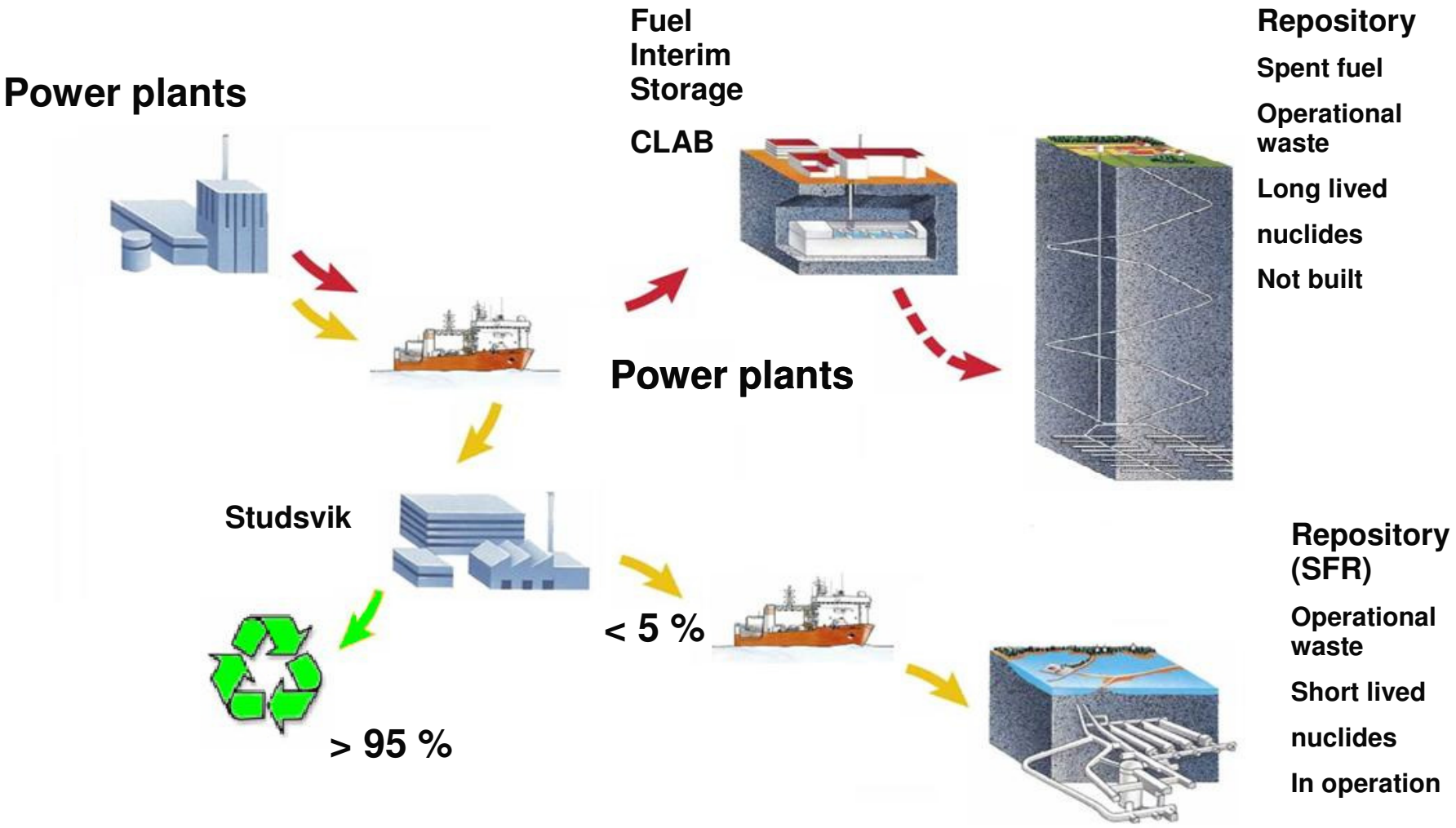

RINGHALS WASTE-PROCESS

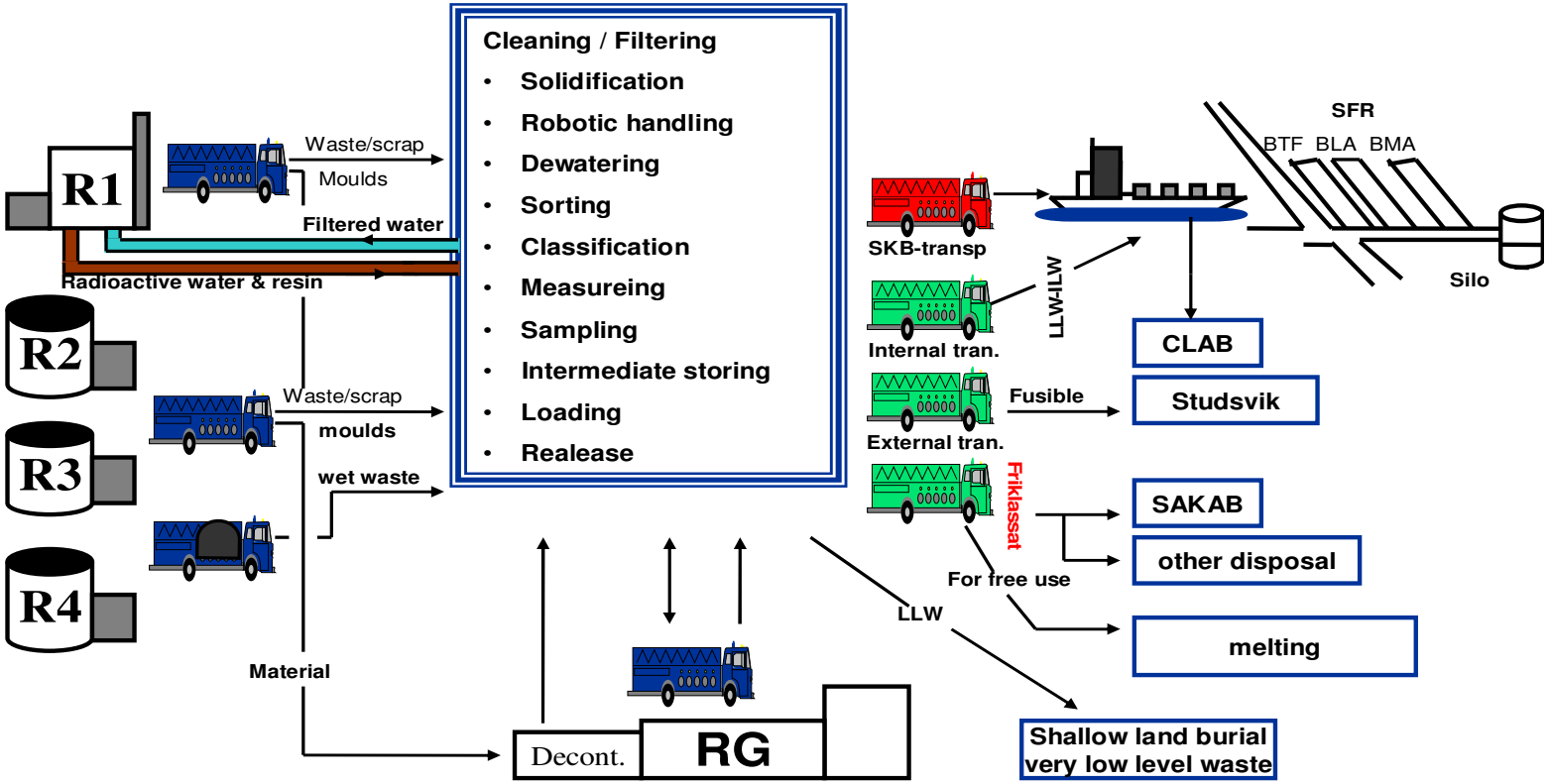

VATTENFALL

Ringhals steam generators

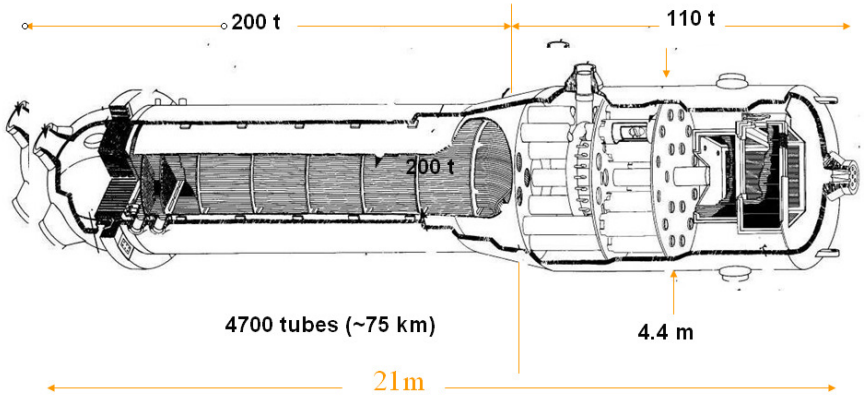

- Radioactivity inventory

	TBq	Ci
– Total:	~34	
92		
– Co-60:	0.65	2
– Fe-55, Ni-63:	33	89

- Activity distribution
  - 95 % in the tube bundle
  - 5 % in the primary chambers

October 2005, mSv/h (mrem)

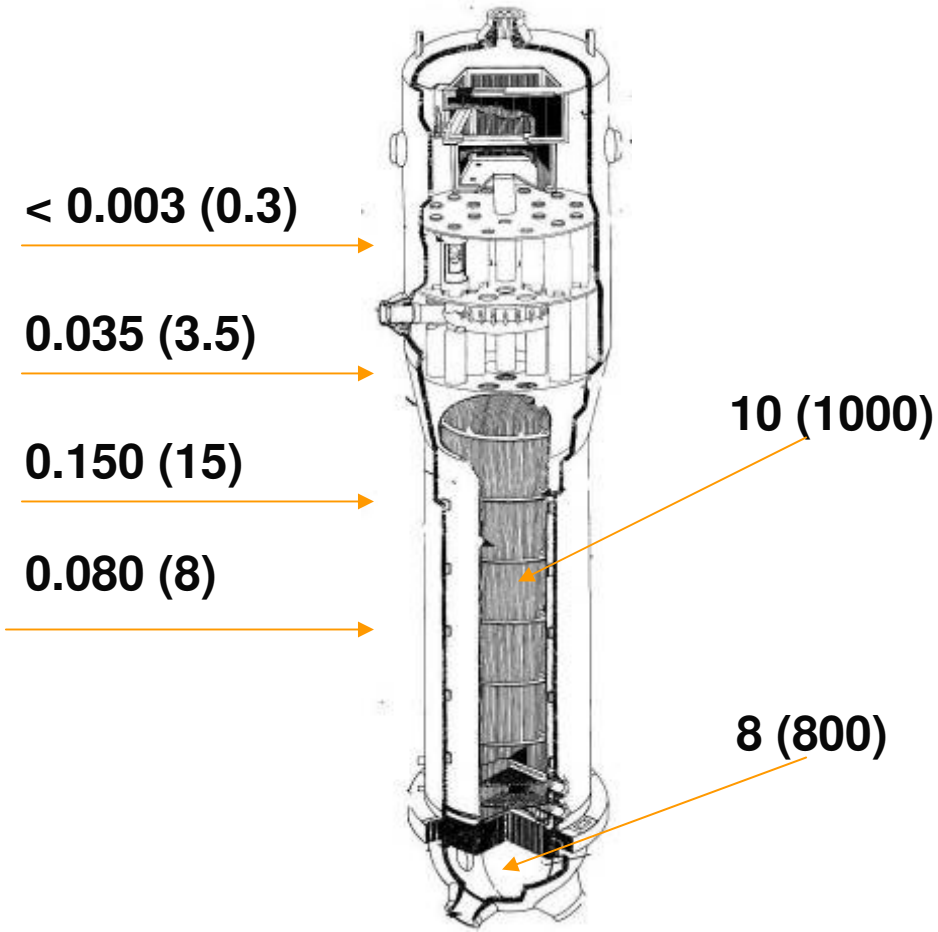

VATTENFALL

Technical concept

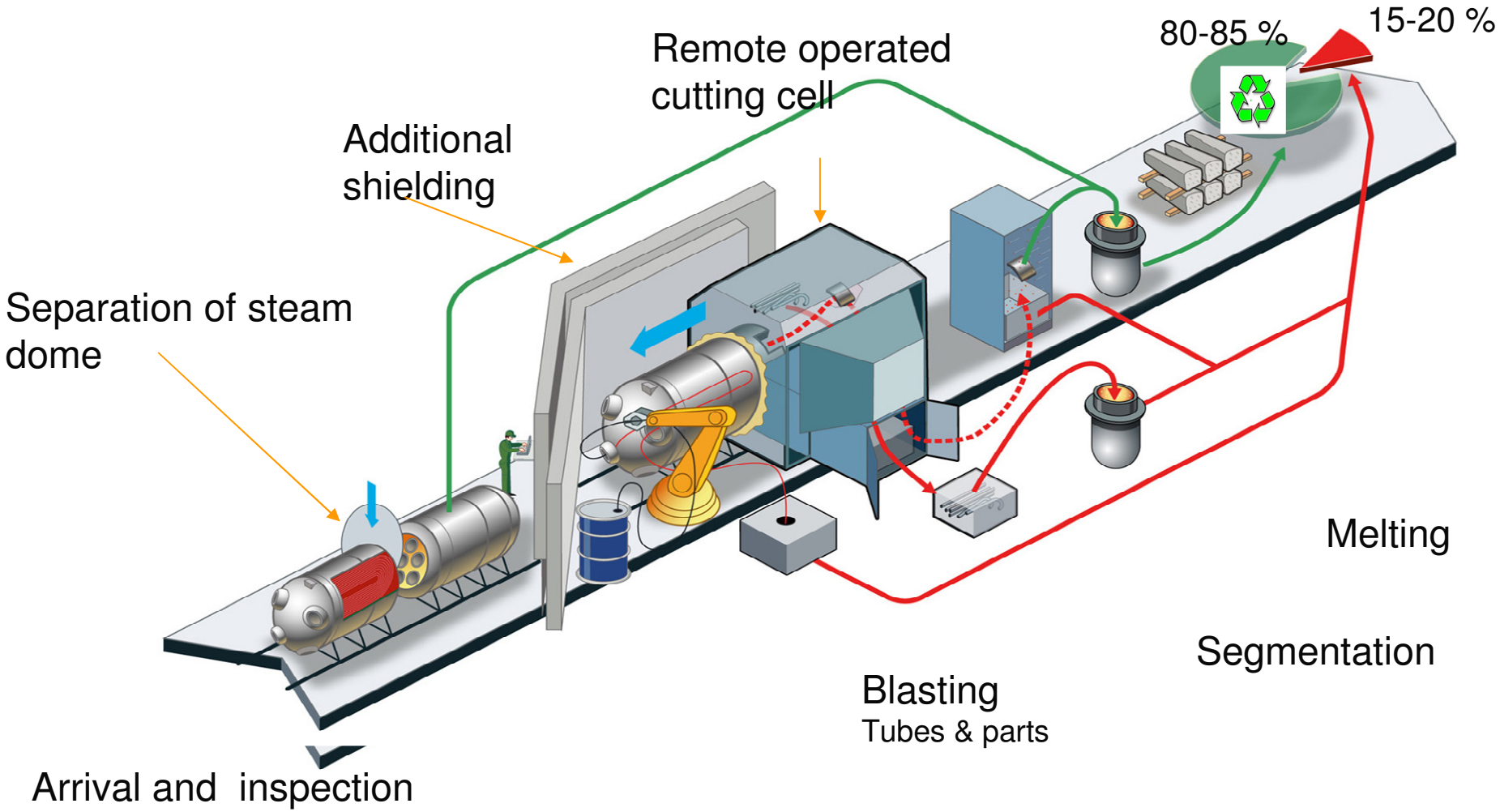

VATTENFALL

Design and qualification of steel package mould

Disposal site waste acceptance criterias:

- Cubic form 1,2x1,2x1,2 meters
- Maximum gross weight of package: 5000 kg
- Maximum surface dose rate: 500 mSv/h
- Compression strenght resistance (static vertical load from 42 packages with maximum weight)
- Resistance against major breakdown at free fall from 9 meters without taking solidification of the waste into account
- The package must fulfill the general long term safety requirements

Project optimisation targets:

- Maximise net volume (>95%)
- Minimise tare weight to allow high waste weight
- Minimise void
- Allow a maximum activity 2 TBq of which 0,5 TBq gamma emitting nuclides

Suitable waste forms

- Metallic scrap
- Inorganic non metallic scrap
- Residues from cutting, mechanical decontamination and melting
- Ashes from incineration

➢Organic waste < 1% of total activity

Physical tests or 3D simulation?

Verification of the design - two different ways:

- physical test
- simulation of the resistance

➢ Simulation has the advantage that it can be a combination of optimisation and verification.

➢ Simulation was selected for this project.

Simulation of compression strength resistance

- Static load of 42 packages with maximum weight (5000 kg each)

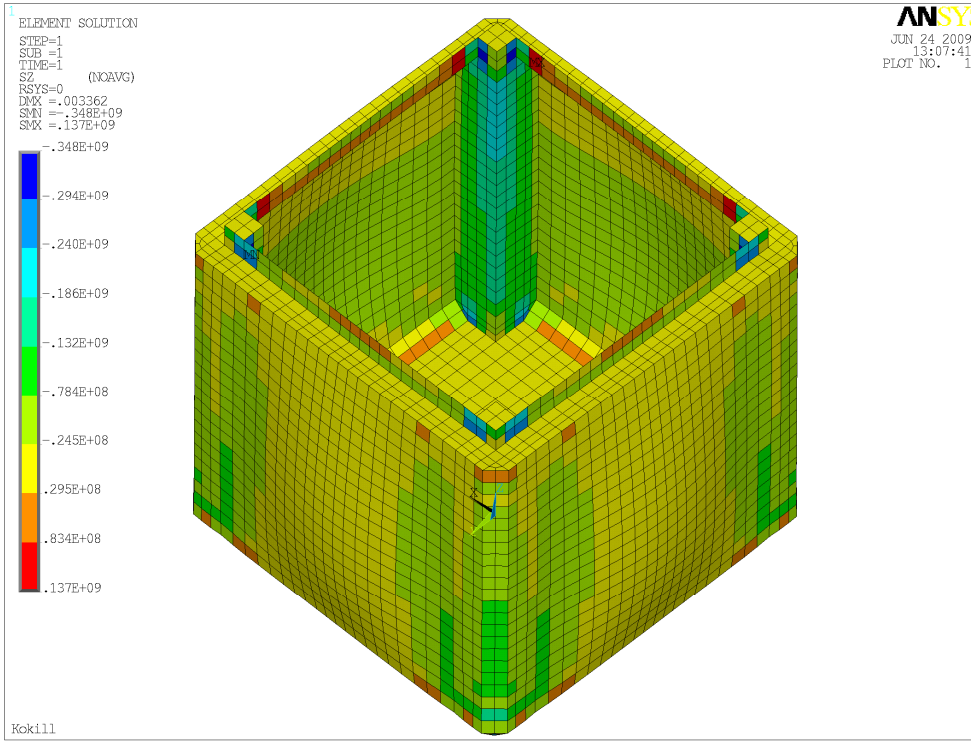

Simulation of compression strenght resistance..

Local deformations of the mould walls and bottom plate

Maximal deformation
mould walls = 3 mm

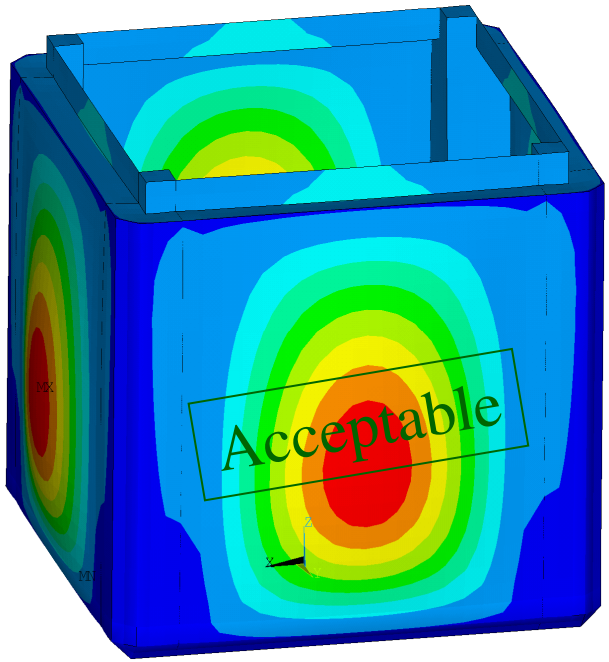

Maximal deformation
bottom plate= 6 mm

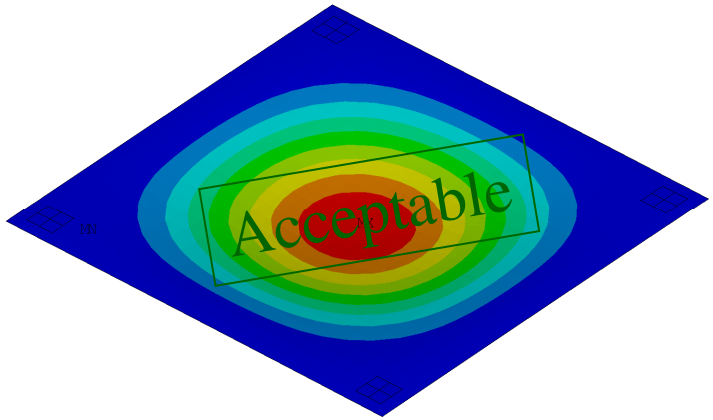

VATTENFALL

Simulation of free fall from 9 meters – case 1

Metallic scrap, without solidification or additive material, horizontal fall towards the ground

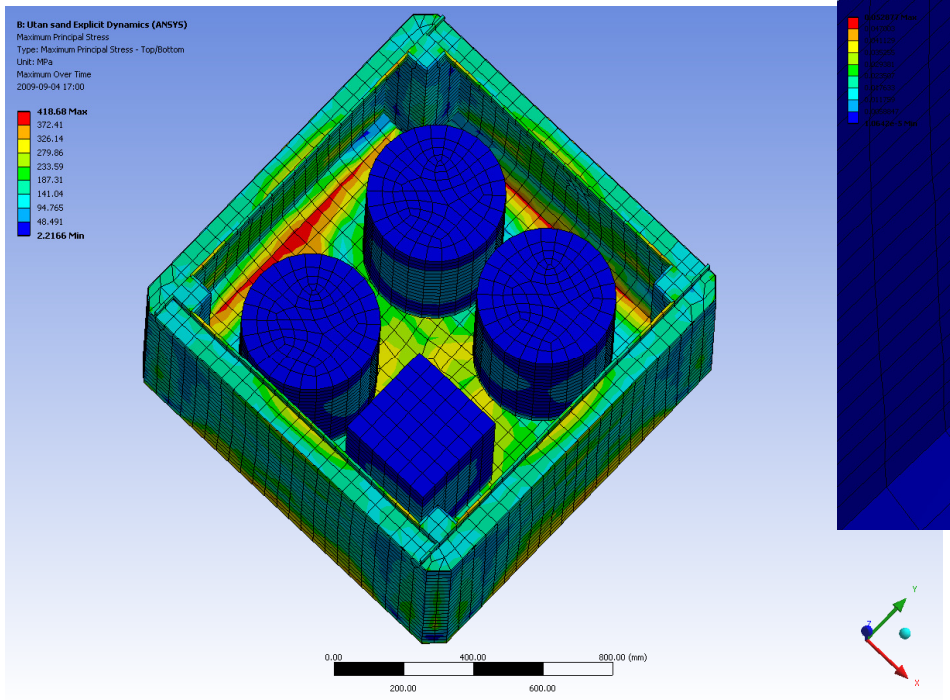

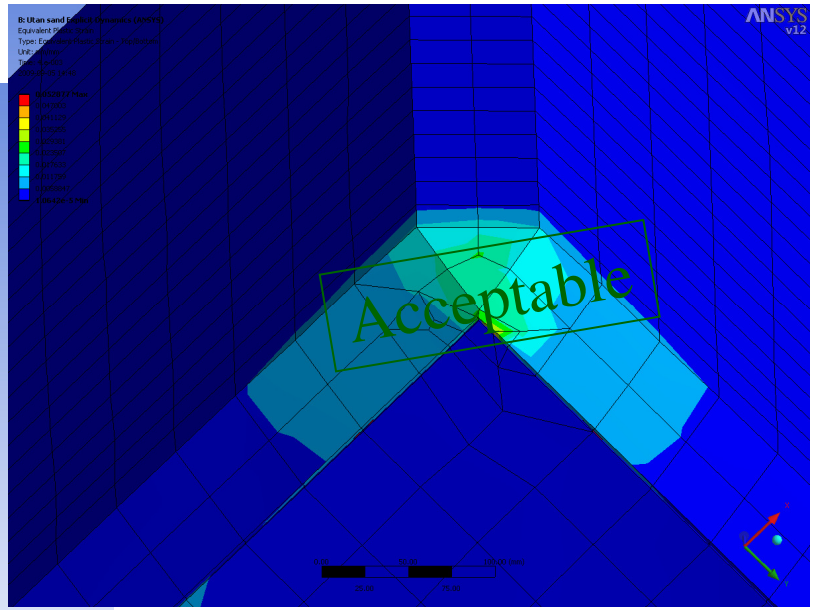

Simulation of free fall from 9 meters – case 2

Metallic scrap, without solidification or additive material,
45 degrees angle towards the ground – the worst case!

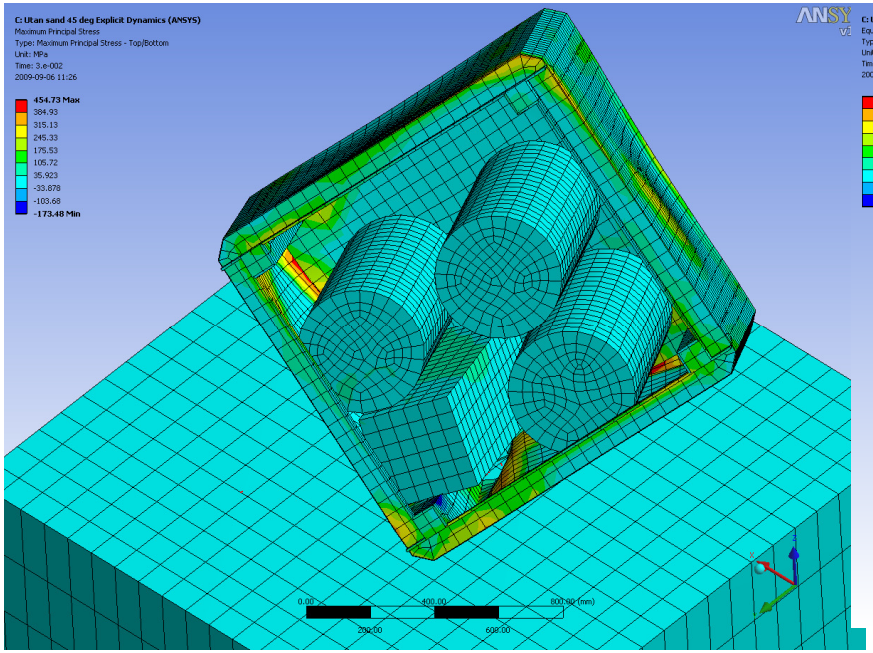

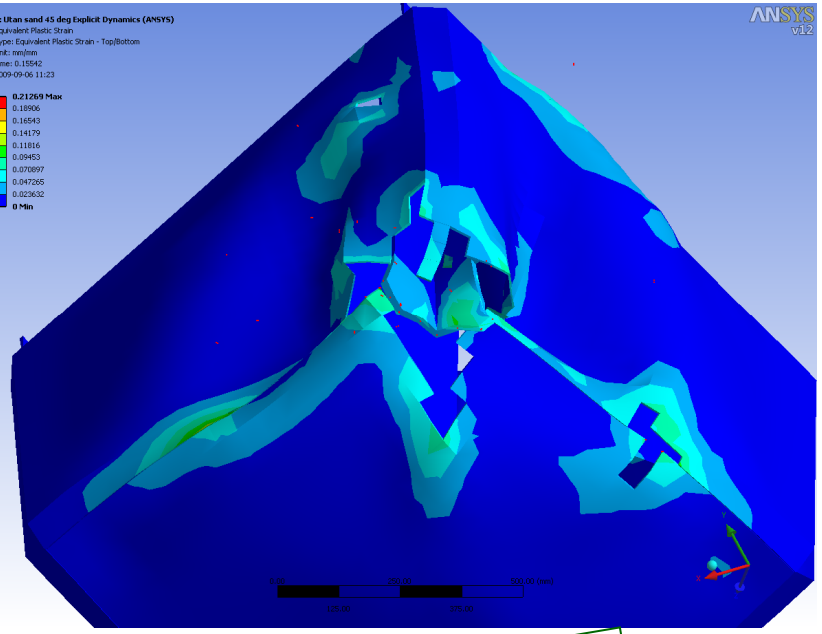

Acceptable

Summary

Project guidelines:

- Safety first - the principle of precaution is ruling
- Maximum net volume and payload
- Minimisation of void
- The same mould should be qualified for several different disposal routes (SFR BMA, SFR Silo and SFL)