Decommissioning of the Danish 5 MW research reactor DR2

by

Niels Strufe and Kurt Lauridsen
Danish Decommissioning

at

Nordic Nuclear Safety Research (NKS)
Decommissioning Conference,
14th - 16th September 2010,
Studsvik, Sweden

DANSK DEKOMMISSIONERING

Aerial photograph of Risø National Laboratory. Reactor DR 2 can be seen in the foreground. DR 3 is situated at the left hand side of the peninsula. DR 1 is hidden to the far right in the picture.

DANSK DEKOMMISSIONERING

DANSK DEKOMMISSIONERING

DR 2

- **Reactor type:** Light-water cooled and moderated pool-type.
- **Max. output:** 5 MW.
- **In service:** 1958-1975 (subsequently brought to state of ”safe enclosure”).
- **Primary activity:** Physics research and production of isotopes.

DANSK DEKOMMISSIONERING

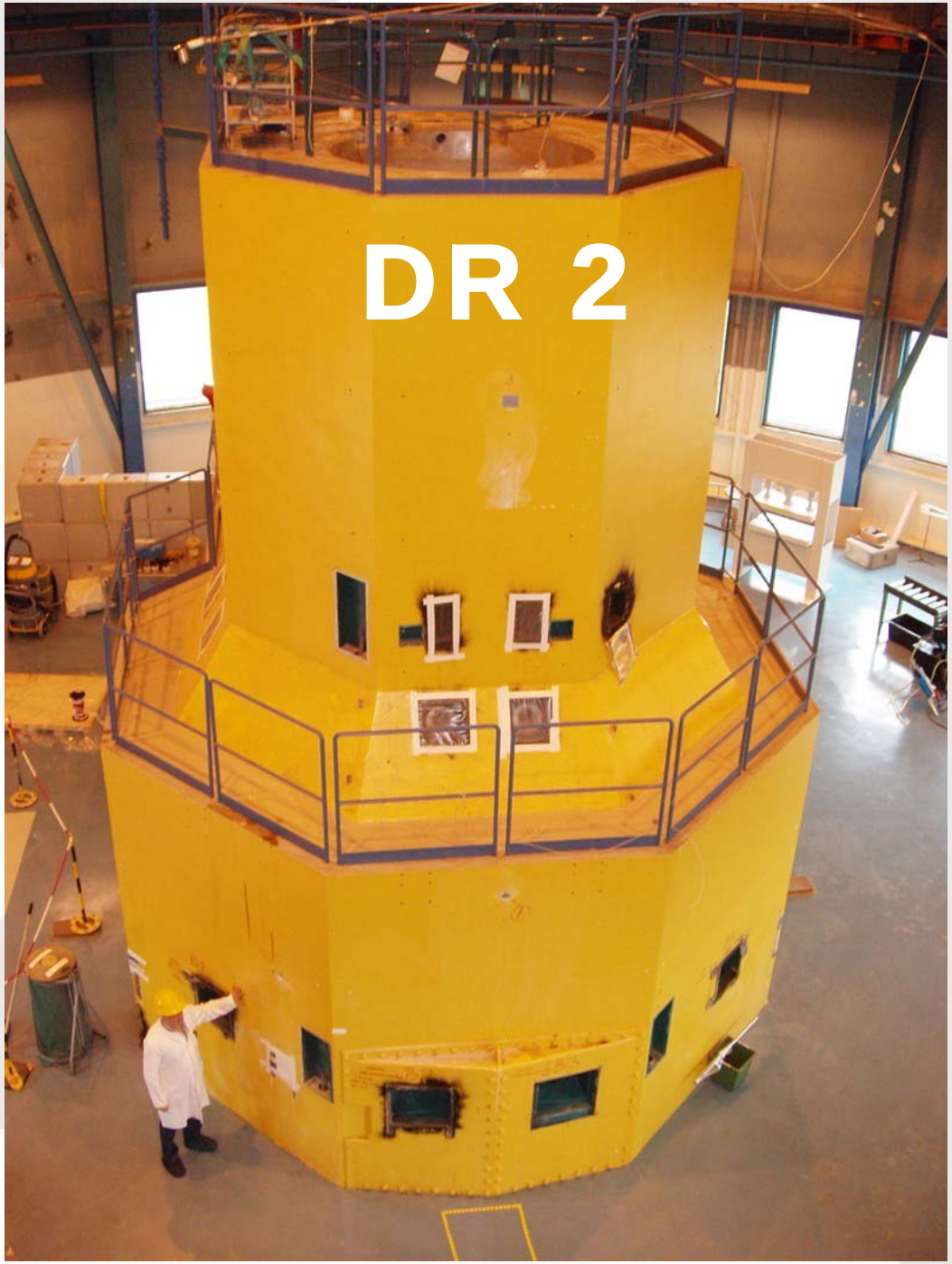

DANSK DEKOMMISSIONERING

Decommissioning of DR 2

- April 2006: funding granted.
- May-December 2006: removal of irradiation facilities and beam tubes.
- January–March 2007: removal of thermal column and grid plate.
- April-December 2007: demolition of concrete reactor block.
- 2008: clearance measurements.
- Final report approved by the nuclear supervisory authorities 30th April 2009

DANSK DEKOMMISSIONERING

Removal of irradiation facilities and beam tubes

- Removal and dismantling and cutting of experimental tubes ("S"-, "R"-, "T"- and "B"-tubes)

DANSK DEKOMMISSIONERING

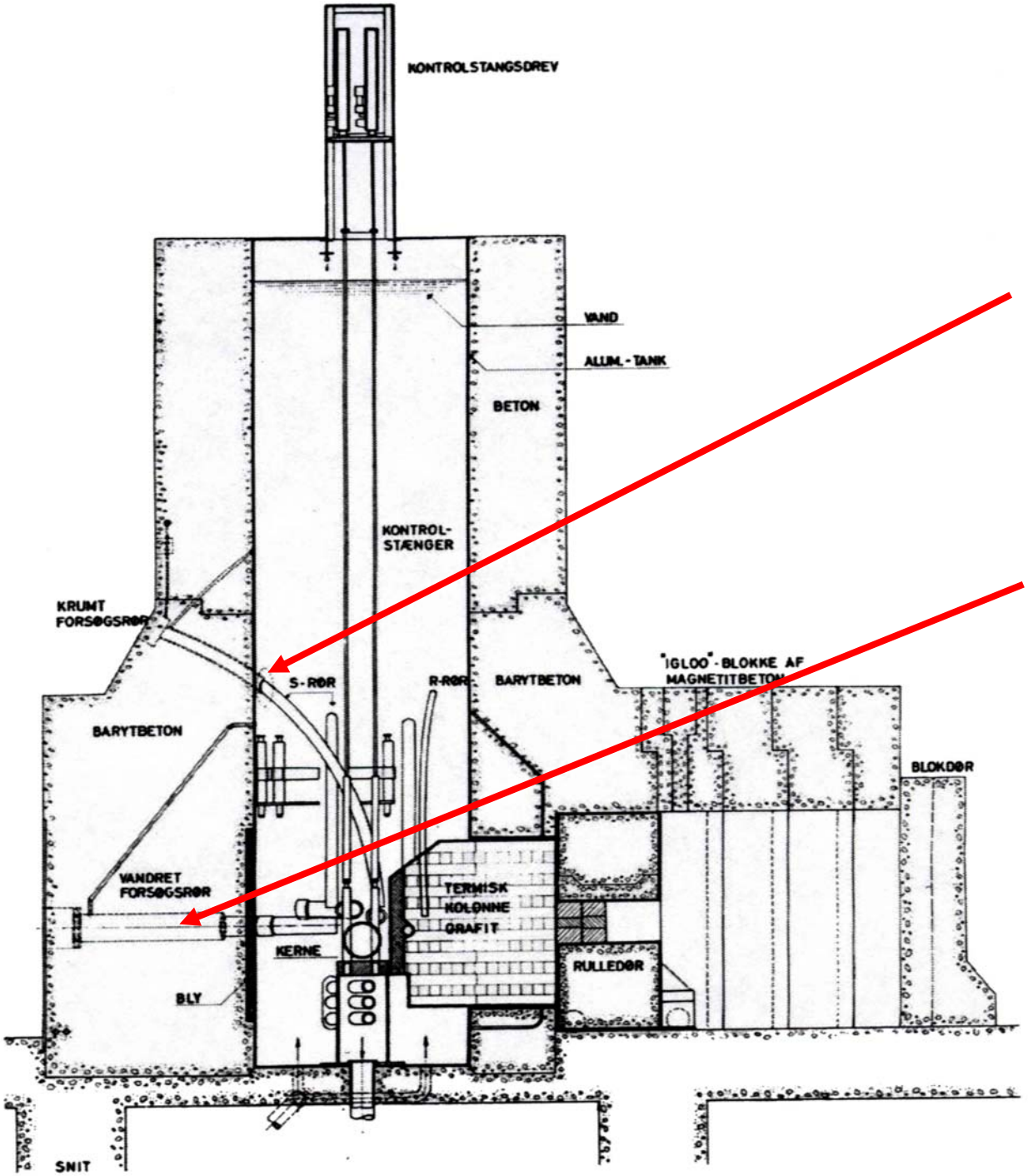

S-tube

B-tube

DANSK DEKOMMISSIONERING

Removal of irradiation facilities and beam tubes

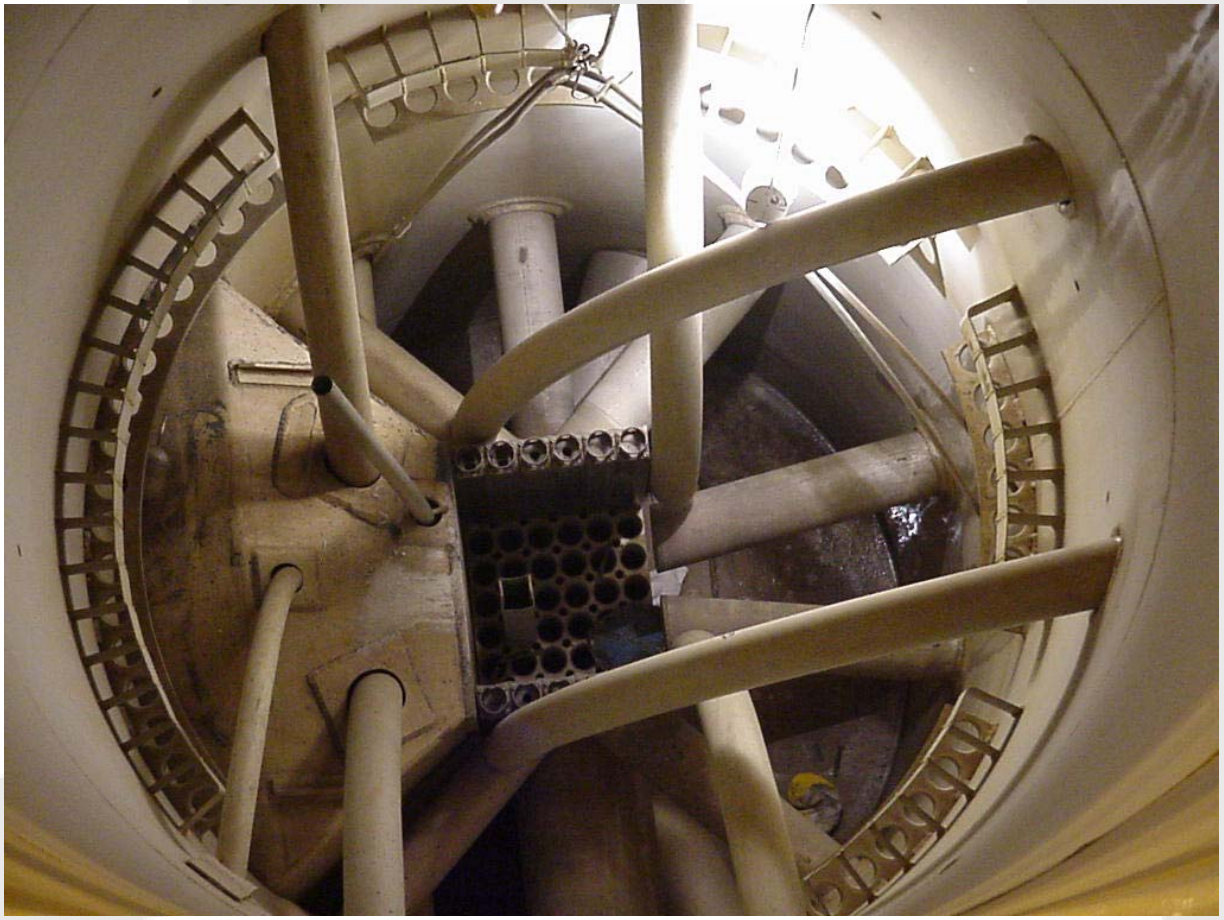

DANSK DEKOMMISSIONERING

Removing the S-5 tube

DANSK DEKOMMISSIONERING

Removing the B-5 plug

DANSK DEKOMMISSIONERING

Removal of thermal column and grid plate

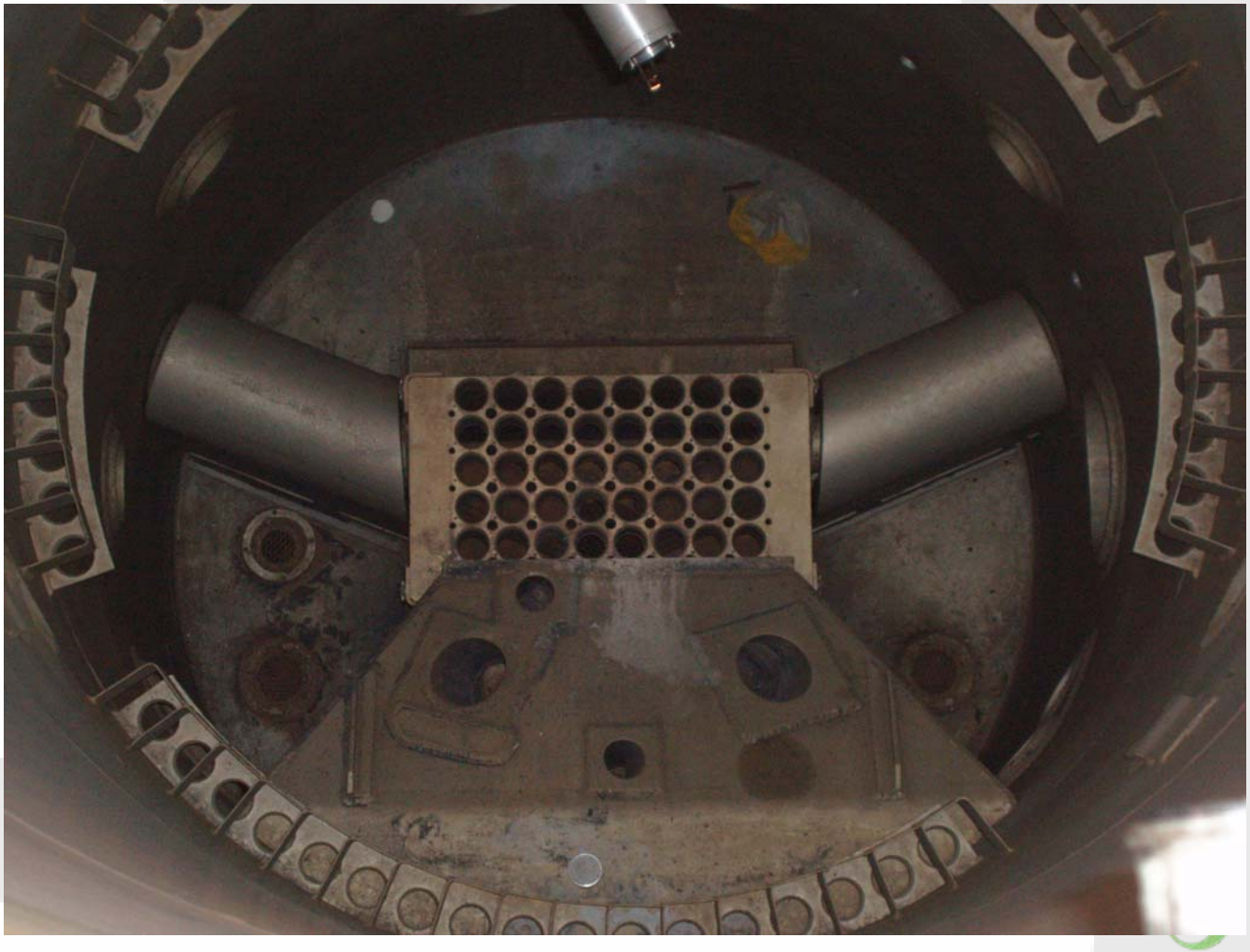

DANSK DEKOMMISSIONERING

Removal of thermal column and grid plate

The works included:

- Removal of graphite
- Removal of Lead nose
- Removal of grid plate

DANSK DEKOMMISSIONERING

Removal of graphite

Measurement of radiation level

DANSK DEKOMMISSIONERING

Removal of graphite

DANSK DEKOMMISSIONERING

Removal of Lead nose

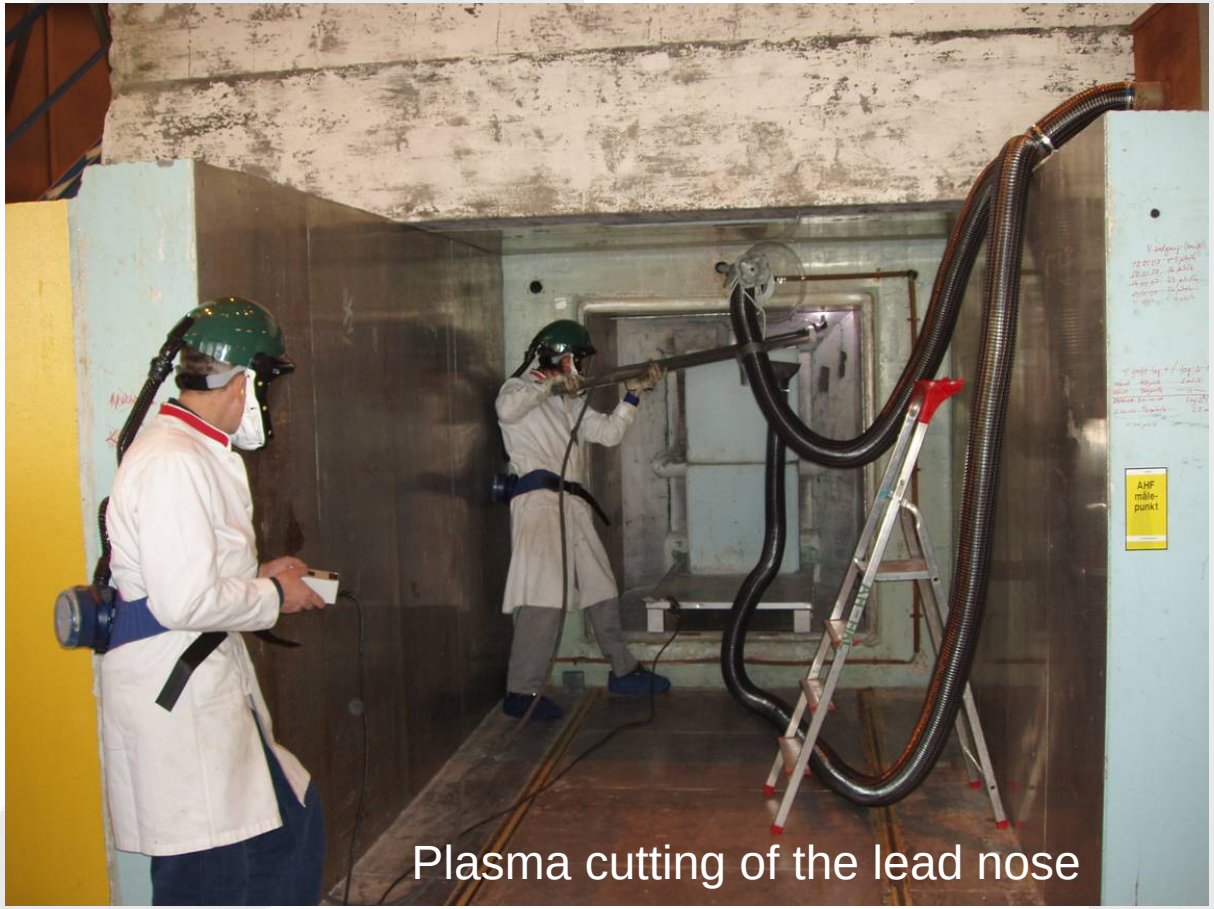

Plasma cutting of the lead nose

DANSK DEKOMMISSIONERING

Removal of Lead nose

Lead nose cut out and placed in container

DANSK DEKOMMISSIONERING

Removal of grid plate

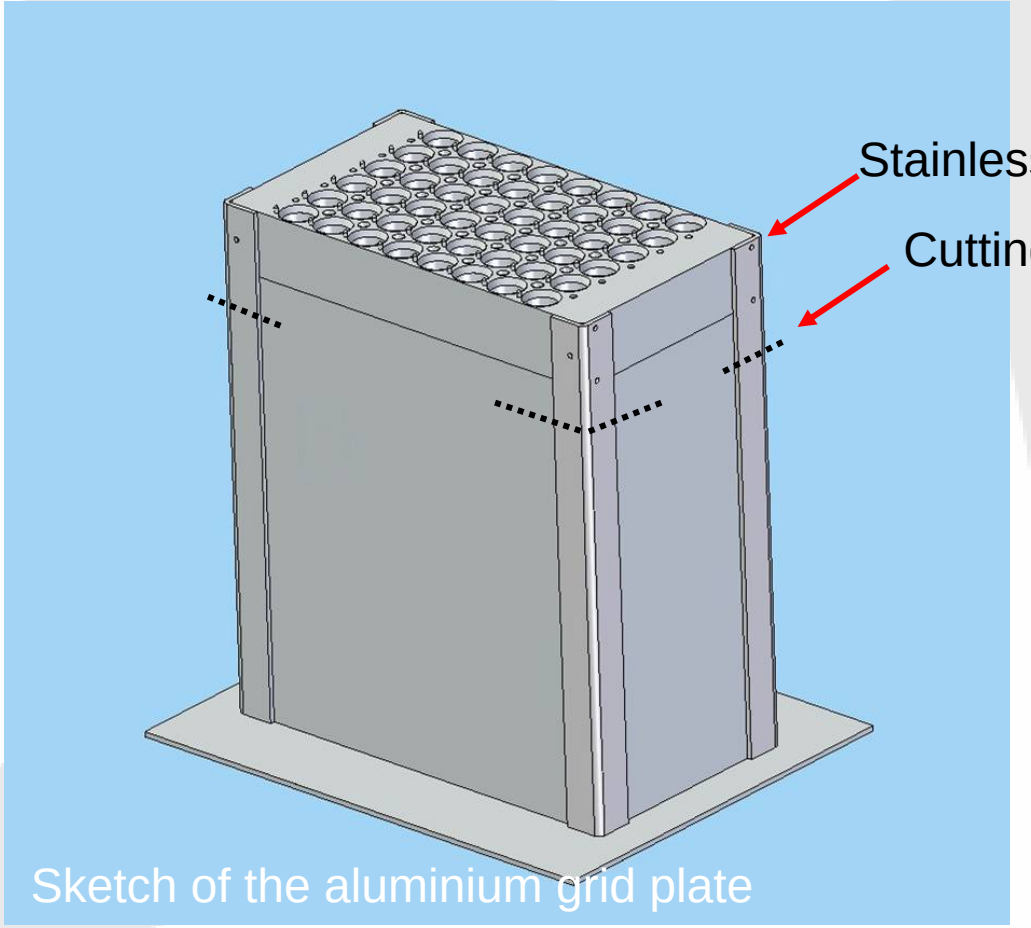

Sketch of the aluminium grid plate

DANSK DEKOMMISSIONERING

Removal of grid plate

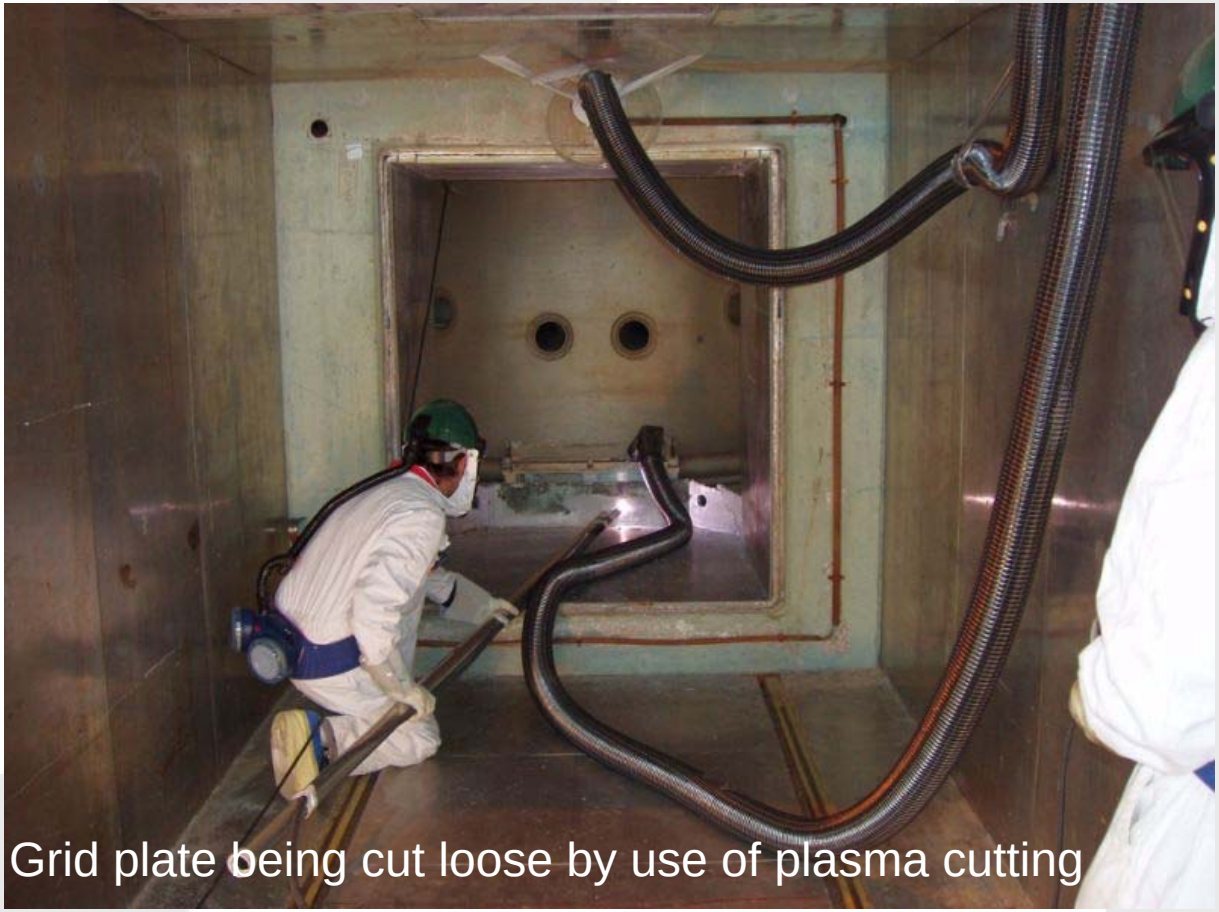

Grid plate being cut loose by use of plasma cutting

DANSK DEKOMMISSIONERING

Demolition of the biological shield

- Characterisation of the activity content in the concrete
- Demolition of concrete reactor block

DANSK DEKOMMISSIONERING

Characterisation of the activity content in the concrete

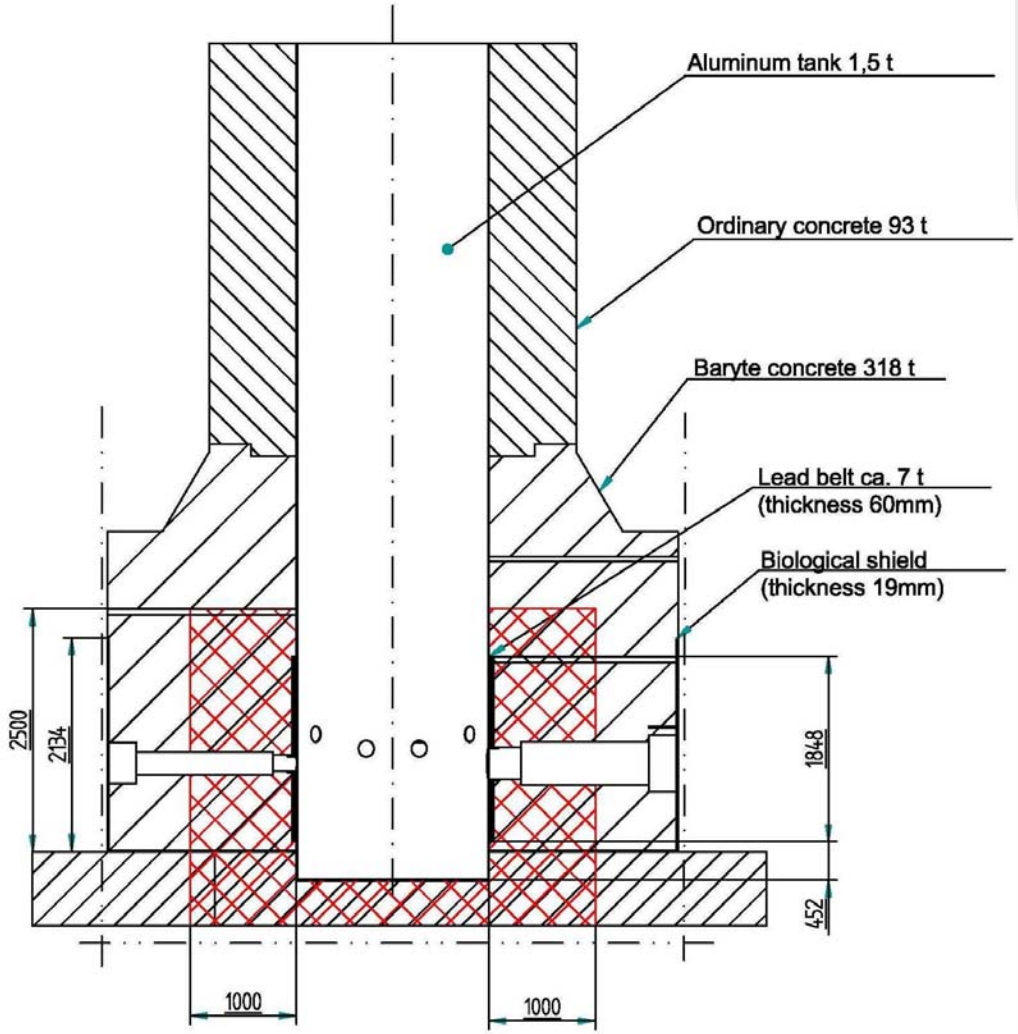

DANSK DEKOMMISSIONERING

The demolition process

- In order to prevent spreading of contamination to the building and the environment a tent was built around the reactor block. The tent was supplied with a filtered ventilation
- Demolition of concrete by use of a hydraulic hammer mounted on a remote operated ’Brokk’ demolition robot
- Demolition of other materials by use of
  - Plasma cutter (steel, aluminium)
  - Dry wire cutting for cutting free the horizontal beam tubes (layers of concrete, steel, aluminium, lead)
  - Saw, handheld (aluminium tank)
  - Flame cutter (steel, pipes)

DANSK DEKOMMISSIONERING

Principle sketch of the demolition site

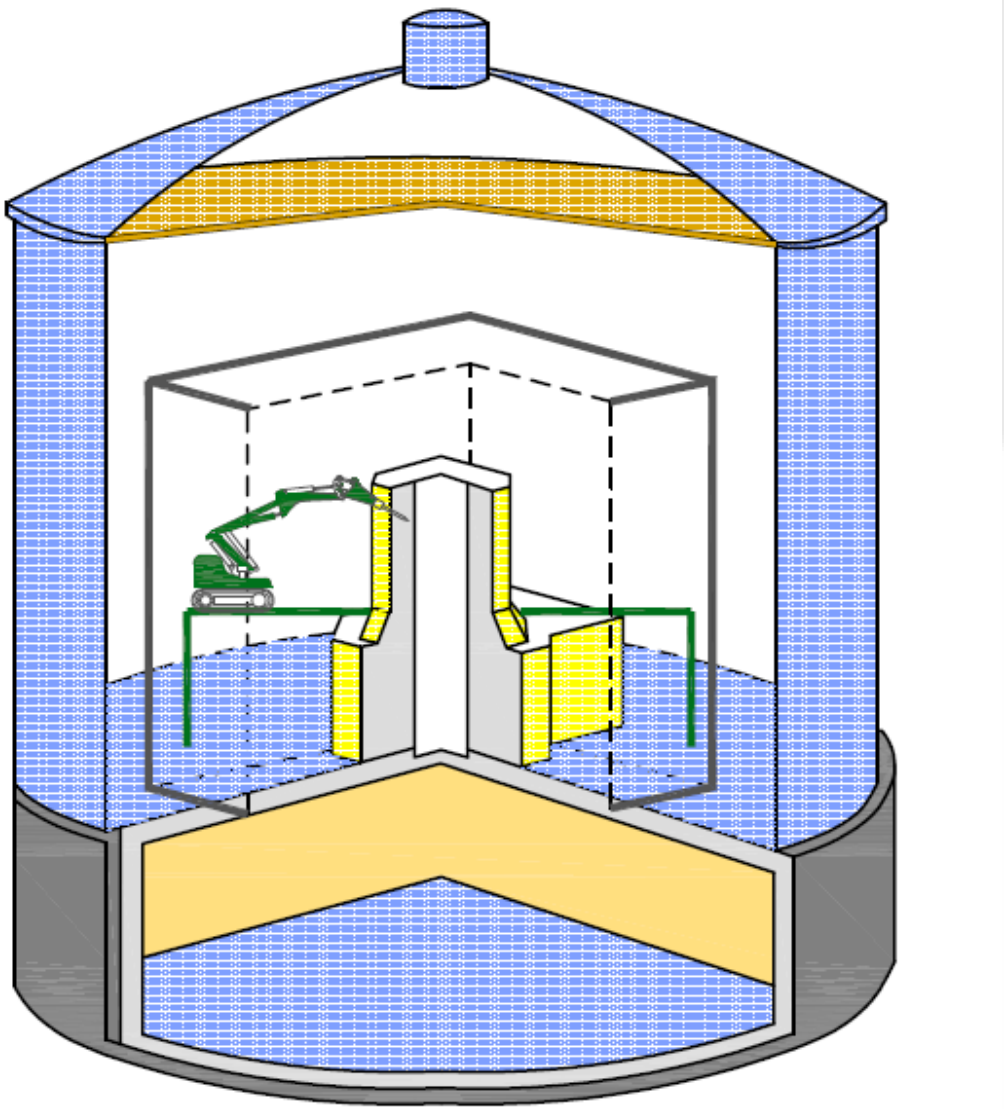

DANSK DEKOMMISSIONERING

Demolition of concrete by use of a hydraulic hammer mounted on a remote operated ’Brokk’ demolition robot

DANSK DEKOMMISSIONERING

Demolition of active parts

DANSK DEKOMMISSIONERING

Demolition completed

DANSK DEKOMMISSIONERING

Clearance measurements

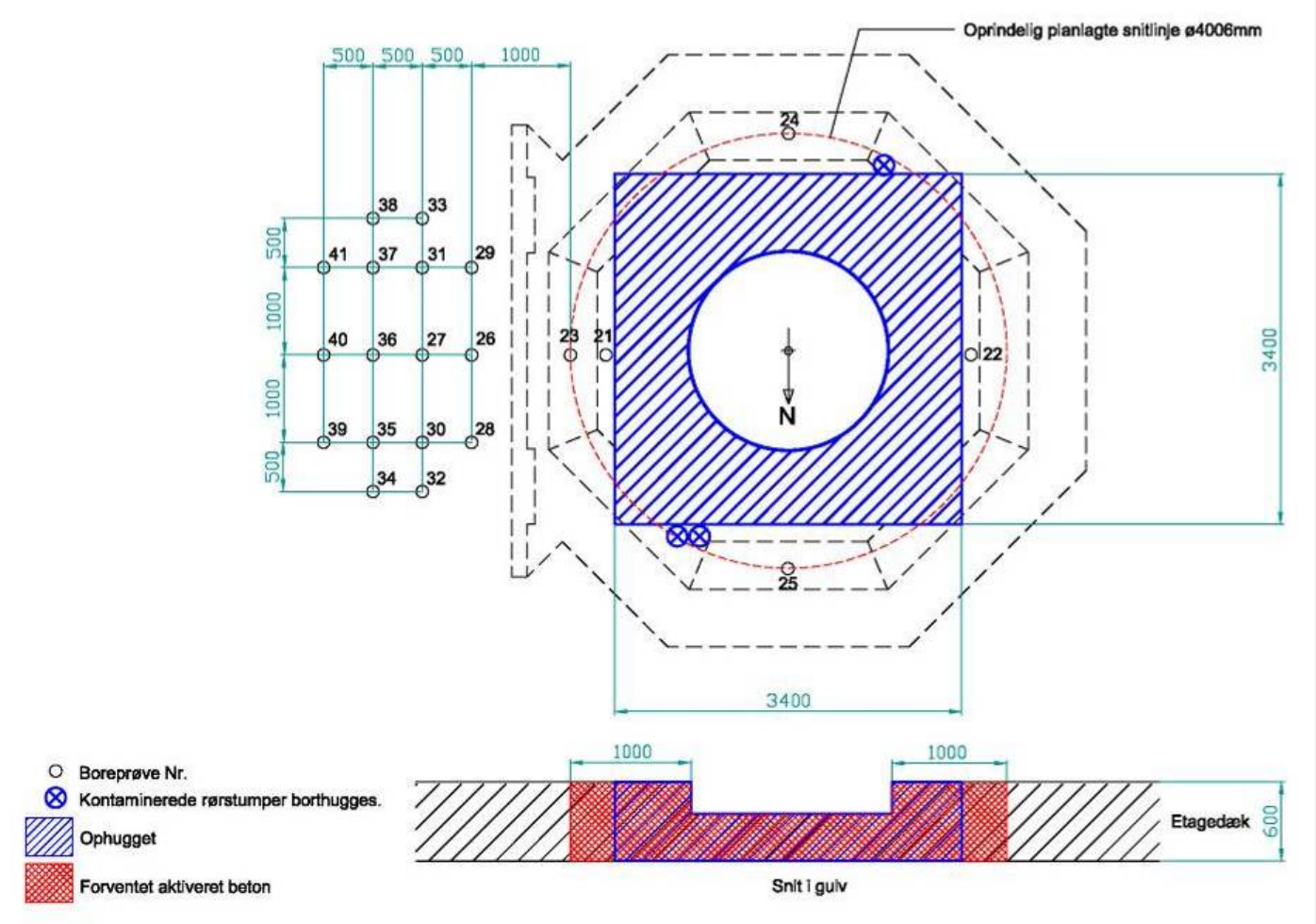

DANSK DEKOMMISSIONERING

Change of end state for the decommissioning

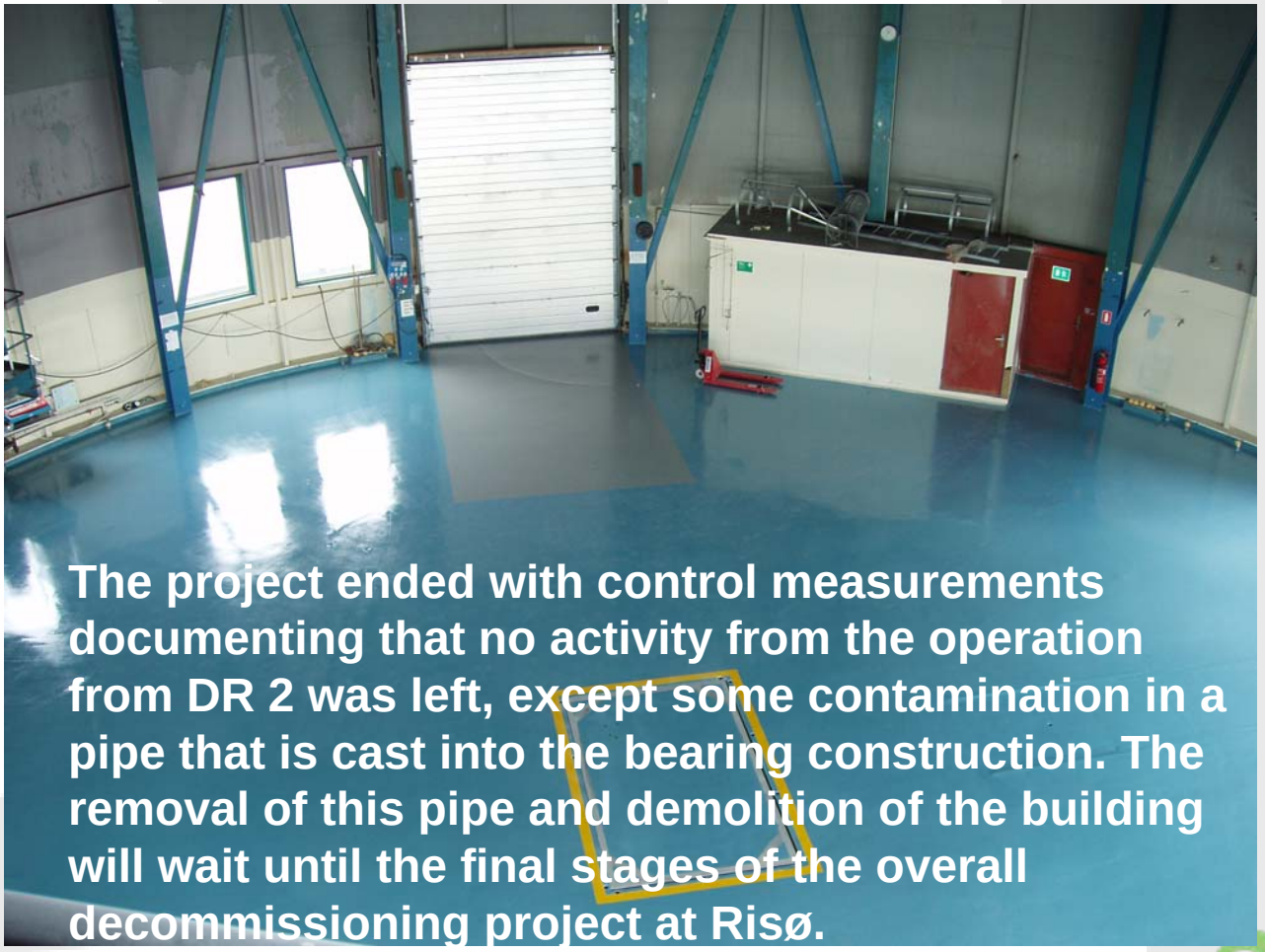

The project ended with control measurements documenting that no activity from the operation from DR 2 was left, except some contamination in a pipe that is cast into the bearing construction. The removal of this pipe and demolition of the building will wait until the final stages of the overall decommissioning project at Risø.

DANSK DEKOMMISSIONERING

Thank you

Report available by download: http://dekom.dk/ddcom_en/